A-3002

Quick Start Guide

Manual Stacker

Rated Load Capacity: 1,100lbs

Lifting Height : 63”

Scan the QR Code for more information.

Thank you for choosing our manual stacker.

For safe and correct use, please read this manual carefully and follow all instructions, precautions, and prohibitions. Keep this manual for future reference. Product specifications may change without notice. If there is any difference between this manual and the actual product, the product shall take precedence.

TABLE OF CONTENTS

INTRODUCTION

1. Warning

2. Parts Introduction

3. Installation Instruction

4. Inspection & Maintenance

1. WARNING

- **Operating Environment**

1. Operate this product only on hard, level surfaces.
2. Do not operate if the ambient temperature is above 104°F (40°C) or below -13°F (-25°C).
3. Do not use in corrosive, rainy, or flammable/explosive environments.

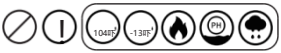

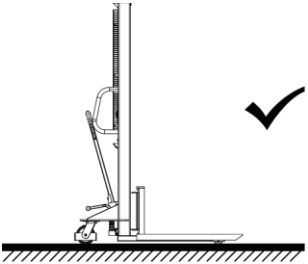

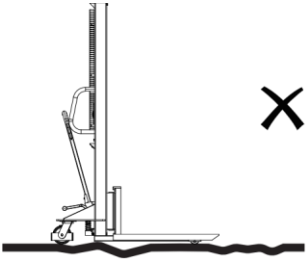

- **Operational Guidelinest**

1. Personnel Safety

- Do not stand on or go under the forks.
- Keep all body parts, especially hands and feet, clear of the forks and moving parts.

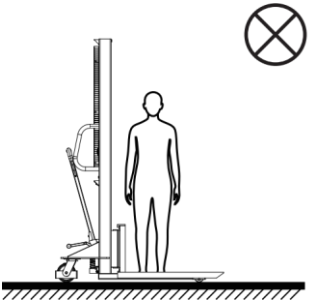

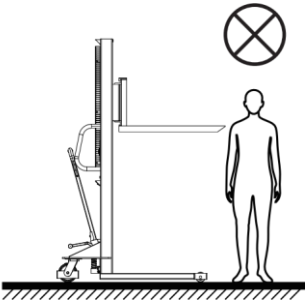

2. Load Limits

- Do not exceed the rated load capacity (2200 lbs)
- Place loads securely in the center of the forks.
- Do not lift off-center or with only the fork tips.

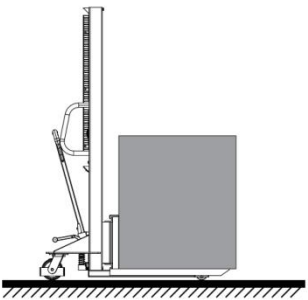

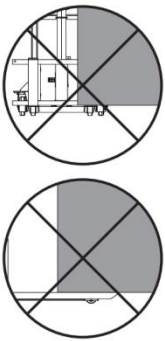

Traveling and Lifting Guidelines

1. Lifting

This product offers two manual lifting methods to suit your preference:

- Using the Handle: Pump the control handle repeatedly to raise the forks.
- Using the Foot Pedal: Step on the pedal repeatedly to raise the forks.

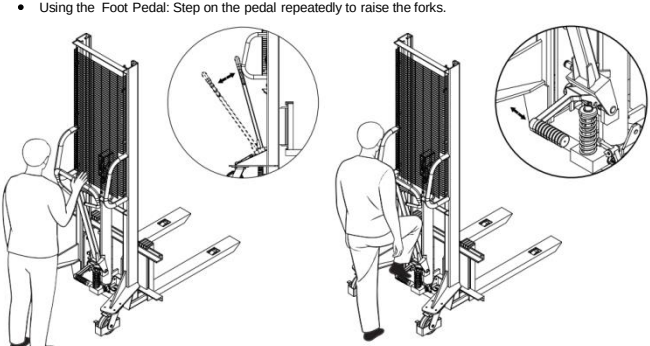

2. Lowering

- Squeeze the control lever on the handle to lower the forks.
- Release the control lever to stop the lowering.

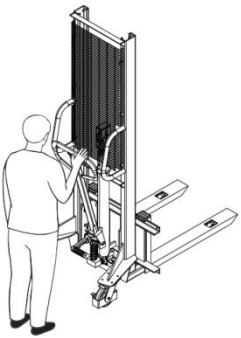

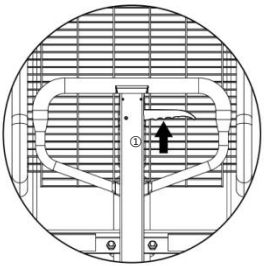

3. Moving & Steering

- Pulling: Grip the control handle with both hands to pull the product and steer it.
- Pushing: To push forward, use the auxiliary handles on the mast for better visibility and control.

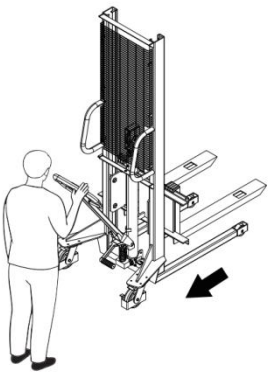

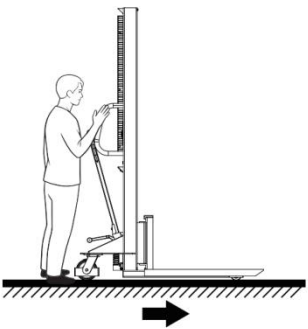

4. Braking & Parking

- Foot Brake: When loading/unloading or parking, step on the foot brake mechanism on the rear swivel caster to prevent the product from rolling.

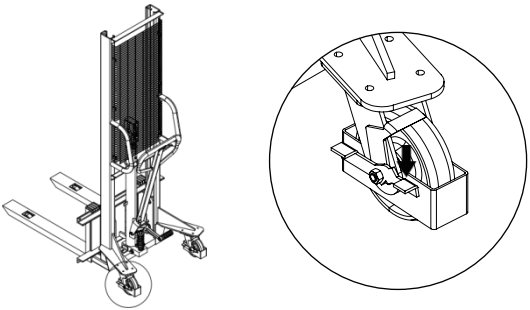

5. Ramp Operation

- Uphill: Forks must face uphill.
- Downhill: Operator must face the product while pulling it.
- Never turn on a slope.

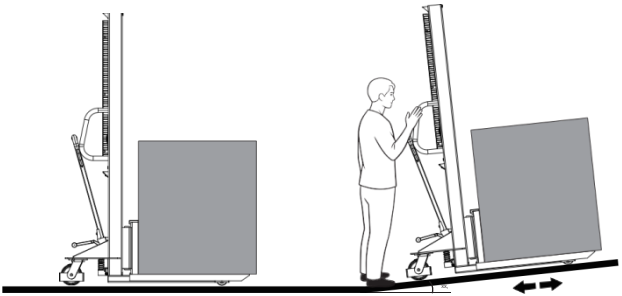

2. Parts Introduction

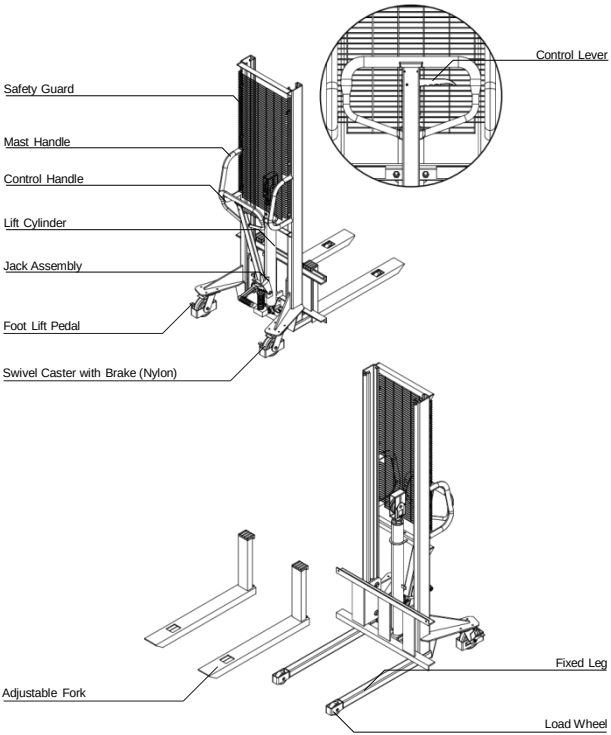

3. Installation Instruction

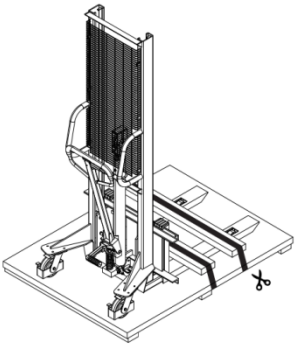

① Carefully unpack and check accessories (Manual, Forks)

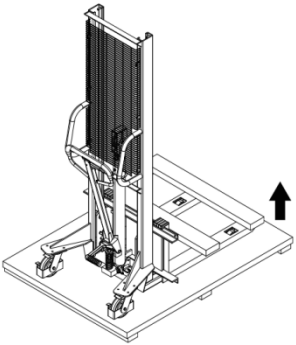

② Remove the securing steel straps and the wooden blocks.

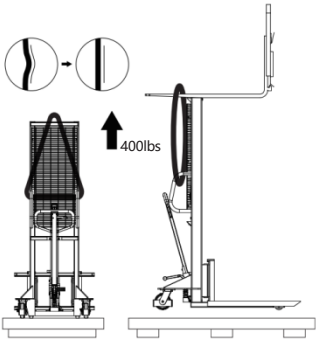

Use slings (rated >400 lbs) through the mast crossbeam.

③ Lift the unit with a hoist or forklift, remove the pallet, and lower the unit safely to the ground.

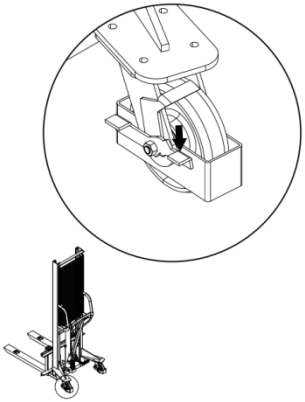

④ Engage the foot brake to ensure it functions correctly.

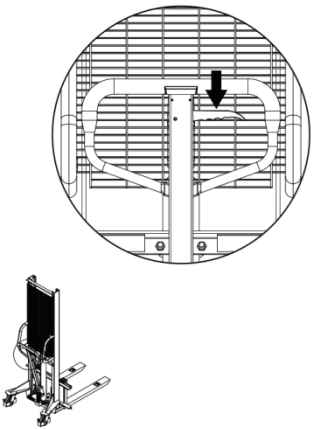

⑤ Press the control lever to the lifting position.

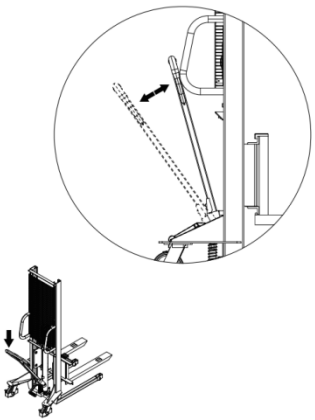

⑥ Test both the hand-pump.

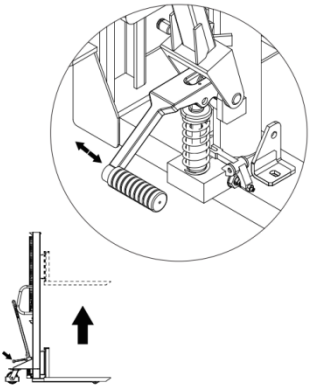

⑦ Test both the foot-pump lifting methods.

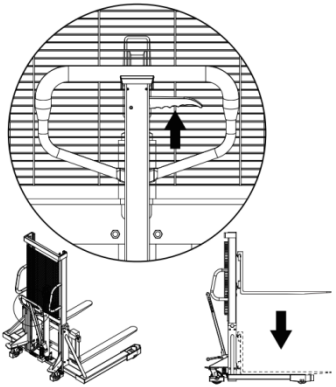

⑧ Squeeze the control lever, and observe whether the forks descend normally.

4. Inspection & Maintenance

Conducting a thorough inspection of the product can help prevent malfunctions and ensure it achieves its expected service life. Maintenance hours are based on 8 hours of operation per day, 200 hours per month. For safe operation, the product should be inspected and maintained according to the maintenance schedule.

- 200-Hour Inspection and Maintenance

No.	Component	Inspection or Service
1	Overall Condition	Check for abnormalities.
2	Jack/Cylinder	Check for leakage.
3	Lifting Chain	Check pins and chain for deformation or breakage. Apply lubricant.
4	Wheel& Bearing	Check for debris entanglement, excessive wear, or unusual noise.
5	Fastener	Ensure all connecting bolts and pins are tight.
6	Mast Bearing	Check for excessive resistance or noise during lifting, and for debris inside the mast.

- Maintenance Intervals for Consumables and Components

Component	Inspection or Service	Interval (hours)
Fork Wheel Bearing	Replace	1,200
Fork Wheel	Replace	1,200
Seal	Replace	1,200
Hydraulic Oil	Replace	1,000
Chain / Mast Bearing	Clean and lubricate	1,200
Wheel	Replace if tread is severely damaged	As needed based on wear
Seal	Replace	1,200